Downloaded from ascelibrary.org by Technion Israel Institute Of Technology on 02/22/25. Copyright ASCE. For personal use only; all rights reserved.

Robust Multi-Objective Optimization of Water Distribution Systems

Sriman Pankaj Boindala[1]; G. Jaykrishnan[2]; and Avi Ostfeld, F.ASCE[3]

[1]Ph.D. Student, Faculty of Civil and Environmental Engineering, Technion–Israel Institute of Technology, Haifa, Israel. ORCID: https://orcid.org/0000-0002-1305-6586.
Email: srimanpankaj@gmail.com
[2]Ph.D. Student, Faculty of Industrial Engineering and Management, Technion–Israel Institute of Technology, Haifa, Israel. Email: jaykrishnang@hotmail.com
[3]Professor, Faculty of Civil and Environmental Engineering, Technion–Israel Institute of Technology, Haifa, Israel (corresponding author). Email: ostfeld@technion.ac.il

ABSTRACT

The purpose of a water distribution network is to supply the required water at sufficient pressures. Water requirement/demand at the nodes is uncertain and can vary erratically. The network design should be able to meet this variation in demand. In addition to this variation in demand, the network should also be resilient to failure. When there is some leakage in a pipe, the network should have surplus energy to meet the required pressure demands at nodes. A new methodology is proposed for the multi-objective combinatorial and discrete water distribution network (WDN) design under uncertainty problem. The proposed methodology uses a combination of popular robust-counterpart (RC) techniques to handle the uncertainty and a meta-heuristic named multi-objective cuckoo search algorithm to handle the discrete combinatorial search space. The uncertain parameter considered here is the nodal demands. The objectives considered for the problem are minimizing construction cost and maximizing resilience index. The proposed methodology is applied to the Hanoi water distribution network. The obtained designs are compared with the standard designs obtained without considering uncertainty. Furthermore, the effect of variation in the uncertainty set of the demands is also reported and discussed.

INTRODUCTION

The optimal design of water distribution systems (WDS) is to find the system components such as: Tank size, pump heads and pipe diameters that can satisfy the constraints at consumer nodes and maintain hydraulic laws. Over the last four decades, this optimal design problem has been a trending research area in water resource engineering. Numerous models and methods have been published, ranging from early linear programming, non-linear programming, and dynamic programming models (Alperovits and Shamir 1977; Avi Ostfeld and Shamir 1996.; Kessler and Shamir 1989) inspired metaheuristic optimization algorithms (Ostfeld et al. 2008.; Savic and Walters 1997; Vasan and Simonovic, 2010.; Wu et al. 2005). Although these methods provided the least cost designs, they suffered from a lack of reliability. Walski (2001) emphasized that optimization based on cost minimization alone has serious negative implications. There is a need to develop new design strategies considering other objectives such as capacity, response to uncertainty, and reliability. To overcome the problem of conflicting multiple objectives, research has moved from single-objective optimization to multi-objective optimization. Over the past two decades, there have been numerous studies on multi-objective design optimization of WDS. Several multi-objective algorithms are used to solve two objectives

© ASCE

Downloaded from ascelibrary.org by Technion Israel Institute Of Technology on 02/22/25. Copyright ASCE. For personal use only; all rights reserved.

(Pankaj et al. 2020; Perelman et al. 2008; Prasad and Park 2004), three objectives (Farmani et al. 2006; Wu et al. 2013) and even six objectives (Fu et al. 2013) design problem.

Most of these methods considered the problem as deterministic, which is not practically true. Almost all the parameters associated with the WDS design problem are uncertain (Babayan et al. 2005). Even though the multi-objective with reliability/resilience provided some robustness towards uncertainty, they lacked explicit uncertain formulation of the problem. Lansey et al. (1989) proposed an explicit single objective design methodology considering uncertainty in demand using chance constraints. Sumer and Lansey (2005) proposed a stochastic optimization model using First Order Second Moment (FOSM) uncertainty analysis. Jung et al. 2012, 2014; Seifollahi-Aghmiuni et al. 2013 also studied probabilistic uncertainty analysis models to obtain optimal designs. Even though these models handled uncertainty, the assumption of probability and the computational time involved in performing Monte-Carlo simulations (MCS) have rendered these techniques impractical, especially for large WDS (Perelman et al. 2013a). To reduce computational time and avoid probability assumptions (Perelman et al. 2013a, b; Schwartz et al. 2016), robust optimization (RO) techniques were used to convert the stochastic problem formulation into a deterministic problem formulation within the desired uncertainty set. These studies are limited to least-cost design, and there are no studies that used RO in solving multi-objective design optimization.

The current study proposes a new robust multi-objective design optimization formulation that simultaneously minimizes construction cost and maximizes network resilience considering demands as uncertain. In this study, the uncertain problem is reformulated using a robust counterpart for both objectives. The self-adaptive multi-objective cuckoo search algorithm (Pankaj et al. 2020) previously used to solve the multi-objective optimal design of WDS is used as the searching algorithm. The proposed methodology is demonstrated on the Hanoi water distribution system.

METHODOLOGY

Robust optimization is a recent optimization technique to solve optimization under uncertainty problems. The main advantage of this technique is that the uncertain problem is reformulated into a tractable form, and the solution obtained is feasible for all possible realizations of the uncertain parameter. This method is gaining popularity in engineering applications due to its fast computational ability and ability to handle uncertain parameters that do not follow any standard probability distribution.

The main problem with optimal water distribution system design under uncertainty is computational time, and consumer demands do not follow any probability distribution. This robust optimization technique can solve both problems. The robust approach to solve the multi-objective design optimization of WDS involves converting the uncertain problem into a deterministic form using a robust counterpart approach and using a simulation-optimization framework (EPANET-MATLAB) with a self-adaptive multi-objective cuckoo search algorithm. This methodology is applied to a Hanoi WDS.

ROBUST OPTIMIZATION

The aim of robust optimization is to obtain a unique solution for the optimization problem whose feasibility is independent of the uncertainty in the data. The general robust optimization formulation is as follows,

© ASCE

Downloaded from ascelibrary.org by Technion Israel Institute Of Technology on 02/22/25. Copyright ASCE. For personal use only; all rights reserved.

$$\begin{gathered} min\, f(x) \\ s.t\; g_i(x, \alpha_i) \geq 0\; \forall \alpha_i \in U_i, i \in [1, m] \end{gathered} \tag{1}$$

Here x is decision vectors, $f(.)$ is the objective function and $g_i(.)$ is the ith constraint function. α_i is the uncertain parameter and U_i is the uncertainty set corresponding to the ith constraint function.

In general, the problem in Equation (1) is intractable, leading to infinite constraints (all possible realizations within the uncertainty sets), but this problem can be reformulated into tractable deterministic form for a few classes of objective function and constraints. This reformulation is called the robust counterpart of the problem. A detailed description of robust optimization and robust counterpart formulation and its applications is provided by Bertisimas et al (2011).

UNCERTAINITY SET

Consider the uncertain variable α varies between a mean $\bar{\alpha}$ and standard deviation δ, then the uncertainty set is of the box $|\alpha - \bar{\alpha}| \leq \delta$ and the robust case is straight forward worst case where all the uncertain variables are simultaneously at their extremes. Even though this reformulation would lead to a better robust solution, the possibility of all the uncertain variables being simultaneously at their extremes is significantly low.

To obtain less conservative solutions, Ben-Tal & Nemirovski (1999) proposed ellipsoidal uncertainty sets. This set assumes that extreme cases do not occur simultaneously. This shapes the uncertainty set to be m dimensional ellipsoid for m constraints.

The ellipsoidal set assumes that all uncertain variables (α) are within some fixed distance Ω from the mean ($\bar{\alpha}$). The distance is measured using an adapted version of Euclidian distance named Mahalanobis distance.

For the current study we use these both uncertainty sets

Box Uncertainty Set

$$U_B = \{|\alpha - \bar{\alpha}| \leq \delta\} \tag{2}$$

Ellipsoidal Uncertainty Set

$$U_E(\Omega) = \{\alpha | (\alpha - \bar{\alpha})^T \Sigma^{-1} (\alpha - \bar{\alpha}) \leq \Omega^2\} \tag{3}$$

Here α is the uncertain parameter, mean/nominal value is $\bar{\alpha}$, δ is the standard deviation, Σ is the co-variance matrix of the uncertain parameters and Ω is the size of the ellipsoid

ROBUST COUNTERPART

Let us consider a simple linear optimization problem with uncertainty,

$$\begin{gathered} min\, A^T x \\ s.t.\, \alpha_i^T x \geq 0, \forall \alpha_i \in U_i \end{gathered} \tag{4}$$

For **box uncertainty set (2),**$U_B = \{|\alpha - \bar{\alpha}| \leq \delta\}$

© ASCE

Downloaded from ascelibrary.org by Technion Israel Institute Of Technology on 02/22/25. Copyright ASCE. For personal use only; all rights reserved.

As the uncertainty is only present in the constraint, we can ignore the objective function and focus on the constraint. The problem (4) can be re-written as,

$$\begin{gathered} min\, A^T x \\ \min_{\alpha_i \in U_i} \{\alpha_i^T x\} \geq 0 \;<=>\; \min_{\alpha_i : |\alpha_i - \overline{\alpha_i}| \leq \delta_i} \{\alpha_i^T x\} \geq 0 \end{gathered} \tag{5}$$

Form the structure of uncertainty set U_B the problem 4 can be written as,

$$\begin{gathered} min\, A^T x \\ s.t. \overline{\alpha}_i^T x - \delta_i x \geq 0 \; \forall i \end{gathered} \tag{6}$$

The problem (4) is replaced by problem (6) which is tractable and can be solved using LP. For **ellipsoidal uncertainty set (3),**

$$U_E(\Omega) = \{\alpha | (\alpha - \overline{\alpha})^T \Sigma^{-1} (\alpha - \overline{\alpha}) \leq \Omega^2\}$$

Similar, to box uncertainty set, the uncertainty in the constraint can be written as formulation shown in (5)

$$\min_{\alpha_i : \{\alpha | (\alpha - \overline{\alpha})^T \Sigma^{-1} (\alpha - \overline{\alpha}) \leq \Omega^2\}} \{\alpha_i^T x\} \geq 0 \tag{7}$$

LHS of (7) can be solved using Karush-Kuhn-Tucker (KKT) conditions as (Baron et al. 2011),

$$\alpha_i = \overline{\alpha_i} - \frac{\Omega}{\sqrt{x^T \Sigma x}} \Sigma x$$

Therefore the constraint (7) can be written as,

$$\overline{\alpha_i^T} x - \Omega \sqrt{x^T \Sigma x} \geq 0 \tag{8}$$

When Σ is positive definite, we can re-write $\Sigma = P^T P$ by Cholesky decomposition, constraint (8) can be written as

$$\overline{\alpha_i^T} x - \Omega |P^T x| \geq 0 \tag{9}$$

MULTI-OBJECTIVE DESIGN OF WDS

The objectives considered for this study are, minimization of cost and maximization of resilience index. The objective is to find design diameters of WDS which can simultaneously minimize cost and maximize resilience with linear mass constraints, energy constraints and minimum head constraints.

Objective Functions,

© ASCE

Downloaded from ascelibrary.org by Technion Israel Institute Of Technology on 02/22/25. Copyright ASCE. For personal use only; all rights reserved.

$$Network\ Cost\ = \sum_{i=1}^{np} C_i\ (D_i) \times L_i \tag{10}$$

Where C_i = Cost per unit length of given pipe diameter, L_i = Length of pipe *i*, D_i = Diameter of the pipe *i* and np = Number of pipes in the network

The resilience index equation is explained as follows:

$$Network\ Resilience = \frac{\sum_{i=1}^{nn} q_i\ (H - H_i^{min})}{\left(\sum_{r=1}^{nor} Q_r H_r + \sum_{p=1}^{npu} \frac{P_p}{\gamma}\right) - \sum_{i=1}^{nn} q_i H_i^{min}} \tag{11}$$

where, q_i = demand at node *i* (cuft/s), H_i = Available head at node *i*, H_i^{min} = Minimum head required at node *i*, nn = number of nodes, nor = number of reservoirs, Q_r = Demand of reservoir, H_r = Head of reservoir, npu = number of power units, P_p = Power generated by power unit p, γ = efficiency of the power unit.

Such that:

$$A_{11}Q - q = 0 \tag{12}$$

$$A_{11}Q + A_{12}H = 0 \tag{13}$$

$$H \geq H^{min} \tag{14}$$

Constraint equations (12-14) are proposed by Todini & Pilati (1988) where $A_{12} = A_{21}^T$ is a topological matrix, A_{11} is a diagonal matrix with non-linear elements representing pipe friction coefficients. H^{min} is the minimum head required, H – Current Head and q – demand

Considering uncertainty in the consumer demands, the mass balance equation can be re-written using the transformations explained in equations (6) and (8). The transformed tractable equations for each box uncertainty and ellipsoidal uncertainty are as follows equations(17-22)

Uncertain Problem:

$$OBJ\ 1: Network\ Cost\ = \sum_{i=1}^{np} C_i\ (D_i) \times L_i \tag{15}$$

$$OBJ\ 2: Network\ Resilience = \frac{\sum_{i=1}^{nn} q_i\ (H - H_i^{min})}{\left(\sum_{r=1}^{nor} Q_r H_r + \sum_{p=1}^{npu} \frac{P_p}{\gamma}\right) - \sum_{i=1}^{nn} q_i H_i^{min}} \tag{16}$$

$$Con\ 1: A_{11}Q - \tilde{q} = 0 \tag{17}$$

$$Con\ 2: A_{11}Q + A_{12}H = 0 \tag{18}$$

$$Con\ 3: H \geq H^{min} \tag{19}$$

© ASCE

Downloaded from ascelibrary.org by Technion Israel Institute Of Technology on 02/22/25. Copyright ASCE. For personal use only; all rights reserved.

$$Con\ 4: D_i \in \{\bar{D}\} \tag{20}$$

Box Uncertainty Set: $U_B = \{|q - \bar{q}| \leq \delta\}$

$$A_{11}Q - \tilde{q} = 0 \Rightarrow A_{11}Q - \bar{q} - \delta = 0 \tag{21}$$

Ellipsoidal Uncertainty Set: $U_E(\Omega) = \{q|(q - \bar{q})^T \Sigma^{-1}(q - \bar{q}) \leq \Omega^2\}$

$$A_{11}Q - \tilde{q} = 0 \Rightarrow A_{11}Q - \bar{q} - \Omega|P^T| = 0, where\ \Sigma = P^T P \tag{22}$$

The constraint equation (17) is replaced with Equation (21) or (22) based on the uncertainty set assumed for the demand in the final RC. The final RC is then solved by taking the new demands as per equations (21) or (22), and the problem is solved using the EPANET-Optimization Algorithm iterative method.

SELF ADAPTIVE MULTI-OBJECTIVE CUCKOO SEARCH ALGORITHM

Any multi-objective optimization algorithm can be used to solve this problem; here SAMOCSA algorithm proposed by (Pankaj et al,2020) is used, which has successfully solved the deterministic multi-objective WDS design problem. The algorithm is a modified version of the multi-objective cuckoo search algorithm. The convergence and divergence parameters of the MOCSA are adaptively modified in each iteration. This self-adaptive mechanism is advantageous as it eliminates the need to tune the performance affecting optimization algorithm parameters. The explanation and detailed mechanism of the optimization algorithm can be found in Pankaj et al, 2020.

CASE STUDY

The above-described methodology is applied to a popular standard benchmark network named Hanoi WDN. Hanoi network is a large gravity-powered network with a single source, 32 demand nodes and 34 pipe links which were first studied by Fujiwara & Kang 1990 fig(1). The single source is at a constant 100 m pressure head, and the minimum pressure head required at each demand outlet is fixed as 30 m. The network is subjected to a single loading condition, and all the demand nodes are at 0 m elevation. The design of the pipe diameters is restricted to six commercially available pipe diameters 304.8 mm, 406.4 mm, 508 mm, 609.6 mm, 762 mm and 1016 mm with Hazen Williams friction coefficient of 130. The complete data of the network and the EPANET input file can be found in the University of Exeter database. The cost equation is given as

$$Cost = \sum_{i=1}^{34} 8.593X10^{-3} D_i^{1.5} L_i \tag{23}$$

We assume that the demands are uncertain with mean demand values ($\bar{q}$) as the nominal demands and the standard deviation (δ) to be 10% of the nominal demand. The demands are assumed to be uncorrelated.

© ASCE

Downloaded from ascelibrary.org by Technion Israel Institute Of Technology on 02/22/25. Copyright ASCE. For personal use only; all rights reserved.

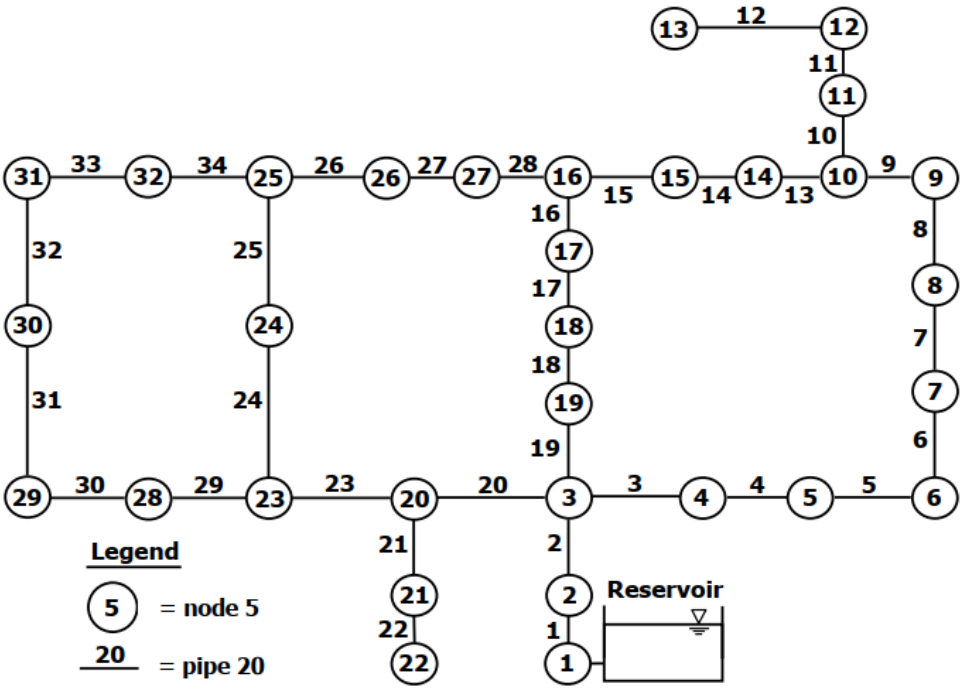

Figure 1. Graph of the topology of Hanoi WDS (Fujiwara & Khang 1990)

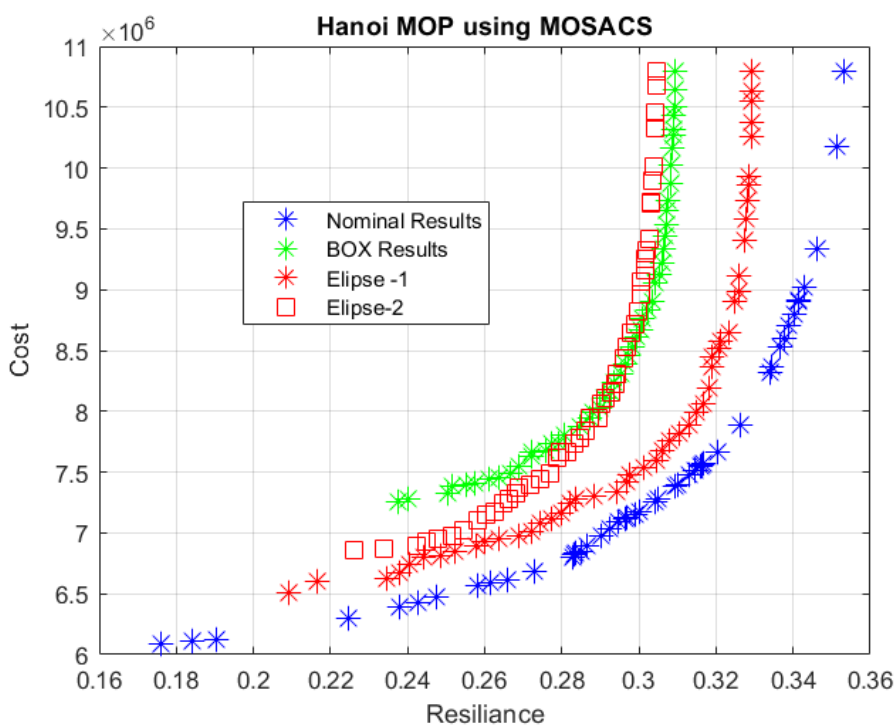

Figure 2. Graph depicting various Pareto fronts obtained for nominal demands (blue), demands varying under box uncertainty set (green) and demands varying under ellipsoidal uncertainty set (Red)

© ASCE

Downloaded from ascelibrary.org by Technion Israel Institute Of Technology on 02/22/25. Copyright ASCE. For personal use only; all rights reserved.

SAMOCSA algorithm is used to obtain the design Pareto-fronts between cost and resilience. The optimization algorithm is initialized with 40 nests (population), and the problem is solved for nominal demands, demands with box uncertainty, and demands with ellipsoidal uncertainty with varying ellipse size $\Omega = \{1,2\}$. The obtained results for the box uncertainty set and different ellipsoidal sets are shown in fig (2). The graph shown in fig(2) compares the results of the nominal case (all the demands are deterministic) with considering uncertain demands that can vary within different uncertainty sets (box as well as ellipsoidal). From the graphs we can infer that uncertainty changes the cost to resilience trade-off. Collaborating with the theory, the worst case is obtained when considering box uncertainty, i.e. we need to provide a higher cost design even for a small resilient design. As the ellipsoidal set size increases ($\Omega = 1\ to\ 2$), the cost vs resilience trade-off is getting worst.

CONCLUSIONS

This work proposes using a robust counterpart approach to handle the demand uncertainty in WDS. The results show significant promise of this new approach in ease of computation and ease of model formulation. Once the problem is converted to tractable deterministic robust counterparts, the methodology for solving the problem is similar to solving a conventional multi-objective design problem. Even though the formulation is similar to max-min approach, the ellipsoidal uncertainty set makes it less conservative. The box uncertainty values are closer to the ellipsoidal set with $\Omega = 2$. The results of the ellipsoidal set with $\Omega = 1$ is a less conservative robust solution.The further scope of this work is to include correlation between the demands and also try to incorporate other objectives like (minimizing the leakages or carbon emissions)

ACKNOWLEDGEMENT

This research was supported by a grant from the United States–Israel Bi-national Science Foundation (BSF).

REFERENCES

Alperovits, E., and Shamir, U. (1977). Design of optimal water distribution systems. *Water Resources Research* 13 (6), 885–900.

Babayan, A., Kapelan, Z., Savic, D., and Walters, G. (2005). “Least-cost design of water distribution networks under demand uncertainty.” *Journal of Water Resources Planning and Management*, American Society of Civil Engineers, 131(5), 375–382.

Baron, O., Milner, J., and Naseraldin, H. (2011). “Facility location: A robust optimization approach.” *Production and Operations Management*, 20(5), 772–785.

Ben-Tal, A., and Nemirovski, A. (1998). “Robust Convex Optimization.” *Mathematics of Operations Research*, 23(4), 769–805.

Bertisimas, D., Brown, D. B., and Caramanis, C. (2011). Theory and applications of robustoptimization. *SIAM Review*, Vol. 53, No. 3, pp. 464-501.

Suribabu, C. R., and Neelakantan, T. R. (2006). Design of water distribution networks using particle swarm optimization, *Urban Water Journal*, 3:2, 111-120.

Farmani, R., Savic, D. A., and Walters, G. A. (2005). Evolutionary multiobjective optimization in water distribution network design. *Engineering Optimization*, 37(2), 167-183.

© ASCE

Downloaded from ascelibrary.org by Technion Israel Institute Of Technology on 02/22/25. Copyright ASCE. For personal use only; all rights reserved.

Farmani, R., Walters, G., and Savic, D. (2006). "Evolutionary multi-objective optimization of the design and operation of water distribution network: total cost vs. reliability vs. water quality." *Journal of Hydroinformatics*, IWA Publishing, 8(3), 165–179.

Fu, G., Kapelan, Z., Kasprzyk, J. R., and Reed, P. (2013). "Optimal Design of Water Distribution Systems Using Many-Objective Visual Analytics." *Journal of Water Resources Planning and Management*, 139(6), 624–633.

Jung, D., Chung, G., and Kim, J. H. (2012). "Optimal design of water distribution systems considering uncertainties in demands and roughness coefficients." *Water Distribution Systems Analysis 2010 - Proceedings of the 12th International Conference, WDSA 2010*, (1989), 1390–1399.

Jung, D., Kang, D., Kim, J. H., and Lansey, K. (2014). "Robustness-Based Design of Water Distribution Systems." *Journal of Water Resources Planning and Management*, 140(11), 04014033.

Kessler, A., and Shamir, U. (1989). "Analysis of the linear programming gradient method for optimal design of water supply networks." *Water Resources Research*, Wiley Online Library, 25(7), 1469–1480.

Lansey, K. E., Duan, N., Mays, L. W., and Tung, Y. (1989). "Water Distribution System Design Under Uncertainties." *Journal of Water Resources Planning and Management*, 115(5), 630–645.

Ostfeld, A., and Shamir, U. (1996). Design of optimal reliable multiquality water supply systems. *Journal of Water Resources Planning and Management* 122 (5), 322–333.

Ostfeld, A., and Tubaltzev, A. (2008). Ant colony optimization for least cost design of water distribution systems. *Journal of Water Resources Planning and Management* 134 (2), 107–118.

Pankaj, B. S., Naidu, M. N., Vasan, A., and Varma, M. R. (2020). "Self-Adaptive Cuckoo Search Algorithm for Optimal Design of Water Distribution Systems." *Water Resources Management*, Water Resources Management, 34(10), 3129–3146.

Perelman, L., Housh, M., and Ostfeld, A. (2013a). Robust optimization for water distribution systems least cost design. *Water Resour Res* 49:6795–6809.

Perelman, L., Housh, M., and Ostfeld, A. (2013b). Least-cost design of water distribution systems under demand uncertainty: The robust counterpart approach. *J Hydroinformatics* 15:737–750.

Perelman, L., Ostfeld, A., and Salomons, E. (2008). "Cross Entropy multi-objective optimization for water distribution systems design." *Water Resources Research*, 44(9), 1–15.

Prasad, T. D., and Park, N.-S. (2004). "Multi-objective genetic algorithms for design of water distribution networks." *Journal of Water Resources Planning and Management*, American Society of Civil Engineers, 130(1), 73–82.

Savic, D. A., and Walters, G. A. (1997). "Genetic Algorithms for Least-Cost Design of Water Distribution Networks." *Journal of Water Resources Planning and Management*, American Society of Civil Engineers, 123(2), 67–77.

Schwartz, R., Housh, M., and Ostfeld, A. (2016). Least-Cost Robust Design Optimization of Water Distribution Systems under Multiple Loading. *J Water Resour Plan Manag* 142:04016031.

Seifollahi-Aghmiuni, S., Bozorg Haddad, O., and Mariño, M. A. (2013). "Water Distribution Network Risk Analysis Under Simultaneous Consumption and Roughness Uncertainties." *Water Resources Management*, 27(7), 2595–2610.

© ASCE

Sumer, D., and Lansey, K. (2005). "Effect of uncertainty on water distribution system model decisions." *Proceedings of the 8th International Conference on Computing and Control for the Water Industry, CCWI 2005: Water Management for the 21st Century*, 1(February), 38–47.

Vasan, A., and Simonovic, S. P. (2010). Optimization of water distribution network design using differential evolution. *Journal of Water Resources Planning and Management*, 136(2), 279-287.

Walski, T. M. (2001). The wrong paradigm – why water distribution optimization doesn't work. *Journal of Water Resources Planning and Management* 127 (2), 203–205.

Wu, W., Maier, H. R., and Simpson, A. R. (2013). "Multi-objective optimization of water distribution systems accounting for economic cost, hydraulic reliability, and greenhouse gas emissions." *Water Resources Research*, 49(3), 1211–1225.

Wu, Z. Y., and Walski, T. (2005). Self-adaptive penalty approach compared with other constraint-handling techniques for pipeline optimization. *Journal of Water Resources Planning and Management* 131 (3), 181–192.

Engineers, 131(3), 181–192.

Downloaded from ascelibrary.org by Technion Israel Institute Of Technology on 02/22/25. Copyright ASCE. For personal use only; all rights reserved.

© ASCE